Assessing Road-Friendly Suspensions:
Implementation Feasibility Study

Transfund New Zealand Research Report No. 229

Assessing Road-Friendly Suspensions:

Implementation Feasibility Study

T.H. Mueller, P. Milliken & J.J. de Pont
TERNZ Ltd, Auckland, New Zealand

Transfund New Zealand Research Report No. 229

ISBN 0-478-25088-6
ISSN 1174-0574

PO Box 2331, Lambton Quay, Wellington, New Zealand
Telephone 64-4-473 0220; Facsimile 64-4-499 0733

Mueller, T.H., Milliken, P., de Pont, J.J. 2002. Assessing road-friendly suspensions for New Zealand use: implementation feasibility study. *Transfund New Zealand Research Report No. 229.* 37pp.

TERNZ (Transport Engineering Research NZ Ltd), PO Box 978 46,
South Auckland Mail Centre, Auckland

Keywords: cost, heavy vehicle, New Zealand, road-friendly suspension, suspension, suspension testing, roads, testing, traffic, transport, vehicle

An Important Note for the Reader

The research detailed in this report was commissioned by Transfund New Zealand.

Transfund New Zealand is a Crown entity established under the Transit New Zealand Act 1989. Its principal objective is to allocate resources to achieve a safe and efficient roading system. Each year, Transfund New Zealand invests a portion of its funds on research that contributes to this objective.

Contents

Executive Summary

Introduction

A number of studies have considered the effect of Heavy Vehicle (HV) suspensions on road damage. Road User Charges (RUC) in New Zealand are based on a "fourth power law" which states that the amount of road damage a vehicle is responsible for is proportional to the fourth power of static axle load. Because of this fourth power relationship, suspensions that generate lower dynamic wheel loads cause less road wear. In recognition of this fact, Australia and the European Union (EU) have concessions for heavy vehicles with road-friendly suspensions.

This project, carried out in 2001, follows on from the previous Transfund project, *Assessing Road-Friendly Suspensions*. A drive-on drive-off device was designed for testing the Road-Friendliness of Heavy Vehicle suspensions.

Methodology

The testing method involves a nearly free-fall drop of the vehicle from a height of 50 mm. The device consists of a platform on to which a vehicle is driven, a mechanical screw lifting mechanism for lifting the entire platform including the vehicle, and an electro-mechanical bombardier-style release mechanism. A data acquisition and processing system is included in the design.

Review of International Requirements

A review of international requirements for road-friendly suspensions and associated testing costs was conducted. Two jurisdictions were examined: Europe and Australia. Table 1 summarises the estimated test cost by country.

Table 1. Road-friendly suspension testing cost, by country.

Country	Estimated Cost	Estimated Test Time
New Zealand	NZD $600	8 hours
Australia	AUD $7,500	8 hours
United Kingdom	£5,500	1 – 1.5 weeks

The Council of the European Union Directive that covers road-friendly suspensions is *97/27/EC – Masses and dimensions of certain motor vehicles and trailers*. Under this Directive, drive axles fitted with road-friendly suspensions are entitled to an increase in axle load limits and, by default, air suspensions are deemed to be road-friendly. Hence, the assessment is used only on suspensions other than air, to determine equivalency to air in terms of their road-friendliness.

The EC drop/bump test which is used in the European Union specifies that, to qualify as road-friendly, a vehicle/suspension system must have a natural frequency of less than 2 Hertz and a damping ratio of greater than 20%. A further requirement is that at least half of the damping be provided by a viscous source.

A testing facility in the United Kingdom (UK) was contacted to determine the cost associated with conducting a test of a tandem drive axle suspension. It was estimated that the duration of the test would be 1 to 1.5 weeks and at a cost of approximately £5500 (excluding VAT).

The Australian Federal Government's Department of Transport and Regional Services (DoTRS) administer the certification of Road-Friendly Suspension (RFS) systems in Australia. Test procedures are based on the European Union Council Directive 96/53/EC dated 25 July 1996. The road-friendliness criterion for Australia is essentially the same as for Europe, except that air suspensions do not qualify automatically.

Testing Costs

To reduce testing and costs, suppliers may test and submit the results of their "worst case" suspension variant. A database of approved road-friendly suspensions is maintained by DoTRS. State and Territory vehicle registering authorities may conduct in-service checks to assess whether suspensions certified as road friendly continue to perform as intended.

An Australian testing facility was contacted regarding the cost of testing a tractor-semi-trailer combination (proposed test included testing drive axles of the tractor and the tridem group of the semi-trailer) for road-friendly suspension compliance. The test was estimated to take a full day and the cost including appropriate documentation would be AUD $7,500 (excluding GST).

Cost Estimates

In this New Zealand study, the cost of constructing and installing the testing device in an existing facility, such as a vehicle testing station, was estimated to be $146,700. This would include the testing mechanism, the transducer array, data acquisition, analysis and reporting software, installation and commissioning. The annual operating cost was estimated to be $96,000, based on suburban Auckland rental costs. A combination of type-approval and in-service compliance testing was used to estimate cost recovery of constructing and operation of the facility. It was estimated that type-approval testing would cost $600 per vehicle and take approximately one day (8 hours) to perform. In-service compliance testing was estimated to cost $40 per test and take about 30 minutes to perform.

Conclusions

The facility designed in this project essentially undertakes the same procedure as is conducted in Europe and Australia. However, its superior design features would enable the tests to be conducted relatively easily and rapidly, and hence at a much lower cost than the equivalent tests in Europe and Australia. In fact, the costs are sufficiently low that in-service compliance testing may be a viable option, while in Australia it was deemed to be too costly.

Note that the estimates of the New Zealand testing time and costs are estimates. Also only a prototype device has been constructed for testing road-friendly suspensions in New Zealand. Conversely, the Australian and the United Kingdom prices are quotations provided by the testing agencies at the time this report was written.

Nevertheless the cost of suspension testing using the test and apparatus outlined in this report is expected to be substantially lower than the costs of road-friendliness testing facilities in Australia and the United Kingdom.

Abstract

The objective of this project, carried out in 2001, was to investigate the design of an operational scale device for testing the "road-friendliness" of heavy vehicle suspensions. This includes an estimate of the cost of manufacturing the device, adapting an existing facility (such as a vehicle testing station) for the operation of the suspension tester, and the running costs associated with the testing device. Two testing regimes were considered; type-approval and in-service compliance.

As part of the design, a review of procedures and devices used to test for road-friendliness overseas was conducted.

The investigation estimates costs of constructing, maintaining, and operating a facility for type-approval or in-service compliance testing of heavy vehicle suspensions, for the purpose of determining their natural frequency and damping ratio. General arrangement drawings of the device are provided along with the cost estimates of the facility.

The initial facility cost is estimated to be $146,700. The annual operating cost is estimated to be $96,000. It is expected that these costs could be recovered through a combination of type-approval testing, with a cost of $600 per vehicle tested and in-service compliance testing with an estimated cost of $40 per test. This is based on an estimated average time for a type-approval test of eight hours (one day) and an estimated average in-service compliance test time of 30 minutes.

The cost of suspension testing using the test and apparatus outlined in this report is expected to be substantially lower than the costs of road-friendliness testing facilities in Australia and the United Kingdom.

1. Introduction

Road User Charges (RUC) in New Zealand are based on the "fourth power law" which states that the amount of road damage a vehicle is responsible for is proportional to the fourth power of the static axle load. This is, however, an approximation since road damage has also been related to other parameters such as vehicle speed, road roughness and suspension type. In recognition of this fact, Australia and the European Union (EU) already have concessions for heavy vehicles with road-friendly suspensions.

This project follows on from the previous Transfund New Zealand project, *Assessing Road-Friendly Suspensions* (Milliken et al. 2001), where a mechanism and procedure for estimating the natural frequency and damping ratio of a heavy vehicle suspension system was successfully built and tested.

A number of operational issues and problems were highlighted in the earlier project, although the overall concept was found to be sound.

Building on the experience of the previous project, a self-contained testing device was designed in 2001 for in-service and/or type approval testing of heavy vehicle suspensions with respect to their road-friendliness.

Consideration was given to the problems identified in the previous project including the need for:

- Improved vehicle lifting design,
- Improved release mechanism incorporated in the design,
- Drive on, drive off capability,
- Shortened set-up and testing time,
- Improved operator safety.

An issue highlighted in Milliken et al. related to the portability of the dropper units. To achieve portability, compromises that were made in the design meant that achieving the simultaneous release of the platforms was very difficult. A fixed facility would remove some of the constraints imposed by the portability requirement.

2. Methodology

A staged approach with subtasks was used in this project. The project plan as described in the research proposal (TERNZ 2001-2002) was:

Stage 1

Task 1 Review road-friendliness assessment procedures used internationally and obtain information on costs.

Task 2 Design to the stage where detailed costs can be determined for a testing facility suitable for operational use.

Task 3 Evaluate the instrumentation options in terms of cost, ease of use and quality of data.

Task 4 Prepare drawings of the design.

Stage 2

Task 1 Estimate cost of constructing the facility.

Task 2 For each level of test, specify the test requirements and estimate the time and costs to perform the test.

Stage 3

Report preparation, peer review and edit.

3. Results

3.1 International Assessments

Task 1 of Stage 1 was to review and obtain costs of international road-friendly assessment procedures.

3.1.1 European Road-Friendly Assessment

The directive that covers road-friendly suspensions in the European Union is *97/27/EC – Masses and dimensions of certain motor vehicles and trailers* (EC 1997). Under this directive, drive axles fitted with road-friendly suspensions are entitled to increase axle load limits. By default, air suspensions[1] are deemed to be road-friendly. The assessment process is thus only used on suspensions other than air to determine whether they are equivalent-to-air in terms of road-friendliness.

The basic requirements under Section 7.11 of the EC (1997) directive are that each axle (non-air suspension) is fitted with dampers that provide viscous damping.

The frequency and damping of the axle(s) must be tested under maximum load and the results of the tests must fall within prescribed limits:

- Mean damping ratio (Dm) must be more than 20% of critical damping,
- Estimated damping ratio with dampers removed (or incapacitated) must not be more than 50% of Dm,
- Sprung mass natural frequency must not be greater than 2.0 Hz (free transient vertical oscillation).

Three different test procedures are defined. One of the three techniques may be used to demonstrate equivalence (to air suspension), or alternatively a fourth option allows any other procedure to be used that can be demonstrated as an equivalent test to either (a), (b), or (c). The three procedures are:

(a) The vehicle is driven at low speed over an 80 mm-step profile (profile is defined within the directive).

(b) The vehicle is pulled down by the chassis so that the driven axle load is 1.5 times the static load. The vehicle is suddenly released and the resulting oscillation analysed.

(c) The vehicle is pulled up by the chassis so that the sprung mass is lifted by 80 mm above the drive axle. The vehicle is suddenly dropped and the ensuing oscillation is analysed.

A testing facility, Leyland Technical Centre Ltd (LTC), was contacted in the United Kingdom (UK) to determine the cost associated with conducting a test of a tandem drive axle suspension. Using test procedure (a), LTC estimated that the duration of the test would be 1 to 1.5 weeks and at a cost of approximately £5500 (excluding VAT (value added tax)).

[1] An air suspension is defined as a suspension that has at least 75% of its spring effect caused by the air spring.

3.1.2 Australian Road-Friendly Assessment

Certification of Road Friendly Suspension (RFS) systems in Australia is administered by the Australian Federal Government's Department of Transport and Regional Services (DoTRS). Vehicle Standards Bulletin 11 was developed to cover the certification of Road Friendly Suspensions (NRTC 1999). The test procedures are based on The Council of the European Union, Council Directive 96/53/EC dated 25 July 1996 (EC 1996). The road-friendliness criterion for Australia is essentially the same as for Europe, with the exception that air suspensions do not qualify by default.

To obtain certification that a suspension model is road friendly, the supplier must submit to the Federal Office of Road Safety (FORS) registration information and specified evidence of compliance with the appropriate fee.

In order to reduce testing and costs, suppliers may test and submit the results of their "worst case" suspension variant. The supplier would then need to submit a technical argument for RFS certification to FORS for approval.

A database of approved road-friendly suspensions is maintained by DoTRS. State and Territory vehicle-registering authorities may conduct in-service checks to assess whether suspensions certified as road friendly continue to perform as intended. However, a report prepared for the National Road Transport Commission (NRTC) found that the cost of in-service compliance testing (testing of shock absorbers) would be too high, compared to the cost of increase pavement wear as a result of degrading performance of road-friendly suspensions (NRTC 2000). Hence in-service testing could not be justified.

Roaduser Systems Pty Ltd in Victoria, Australia, was contacted regarding the cost of testing a tractor-semi-trailer combination (proposed test included testing drive axles of the tractor and the tridem group of the semi-trailer) for road-friendly suspension compliance. Roaduser estimated that the test would take a full day and the cost including appropriate documentation would be AUD $7,500 (excluding GST, Goods and Services Tax).

3.2 Device Design

Tasks 2 through to 4 of Stage 1 relate to the design of the testing device and the instrumentation requirements.

3.2.1 Dropper Design and Operation

In the earlier work by Milliken et al. a set of portable droppers for testing suspensions was designed, built and tested. Although the concept of portability was attractive for flexibility of testing, the test procedure involved lifting the wheels of the vehicle on to the droppers. This required the operators to place themselves under the vehicle while raising it, and this is a hazardous position. Since this procedure proved to be quite time-consuming and cumbersome, a drive-on drive-off design is preferred.

The bold arrows in the plan view of the testing facility (Figure 3.1) indicate the direction of travel for a vehicle being tested. There is nothing to prevent the vehicle from travelling in either direction. The device is a drive-on drive-off design.

Milliken et al. found in their previous work that there were no significant differences in the results of testing drop heights between 48 mm and 80 mm. However, a drop height of 112 mm was considered very aggressive, since, for some vehicles, the tyres lost contact with the platforms after the first bounce. The design and procedures presented in this present report are based on a 50 mm drop height although there is nothing to limit modification for other drop heights.

The design approach to the overall dropper was one of sub-groups. The device was broken down into 3 components, the Dropping Mechanism 1.0, the Platform 2.0, and the Release System 3.0. Each of these was further reduced into constituent parts. The design drawings are supplied in the Appendix (pp. 25-35). The discussion that follows refers to those drawings.

The general arrangement drawings (plan and elevation views) of the dropper design are shown in Figures 3.1 and 3.2, below. The overall facility arrangement consists of two platforms, one for each side of the vehicle. Each platform has two sets of hinge elements, a release system (synchronised), and two sets of lifting screw jacks. The lifting screw jacks are powered by a single electric motor.

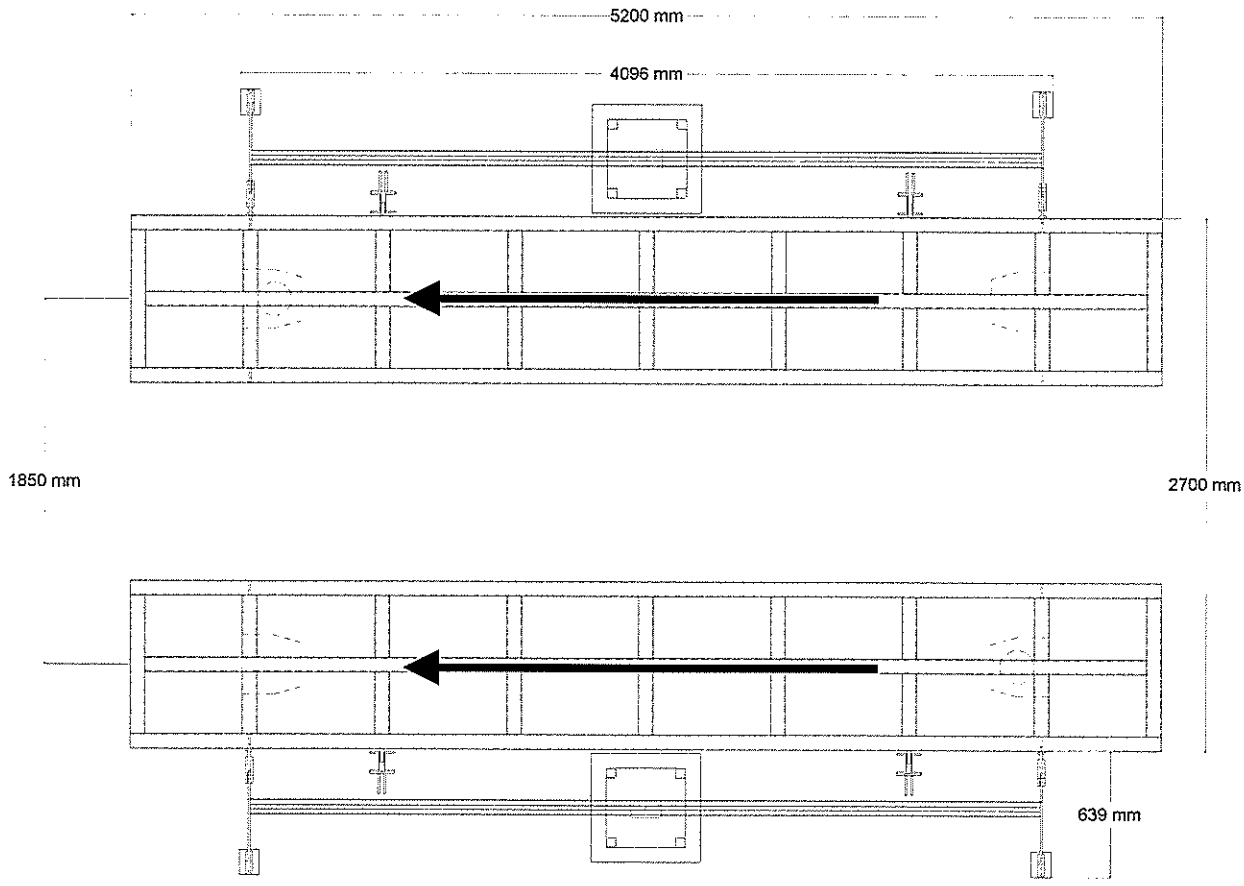

Figure 3.1 Plan view of testing facility. Two platforms are shown, one for each side of a vehicle.

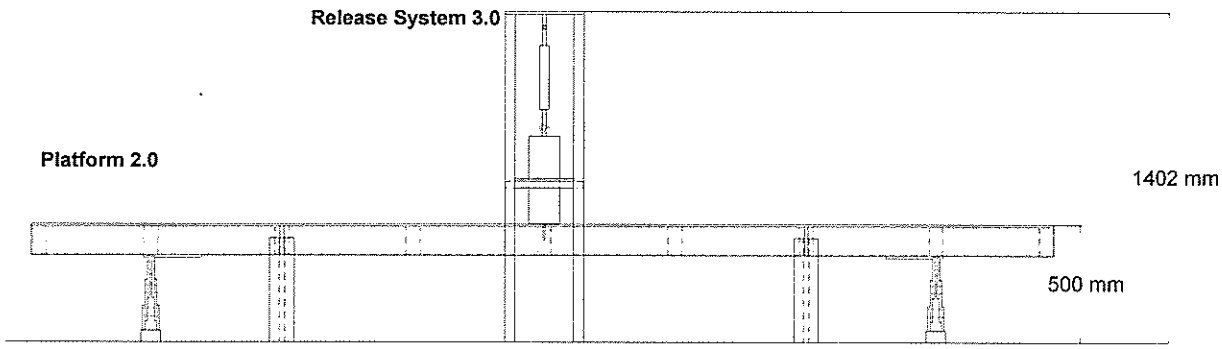

Figure 3.2 Elevation view of dropper platform.

Figure 3.3 illustrates the drive-on or lowered position of the device (note only one platform is shown, corresponding to one side of the vehicle). The platform, in its lowered position, rests on steel stops (not shown) and is level with the ground. A vehicle is driven on and the axle group to be tested is positioned on the platform. The constituent components of the device are labelled and their details are provided in the Appendix.

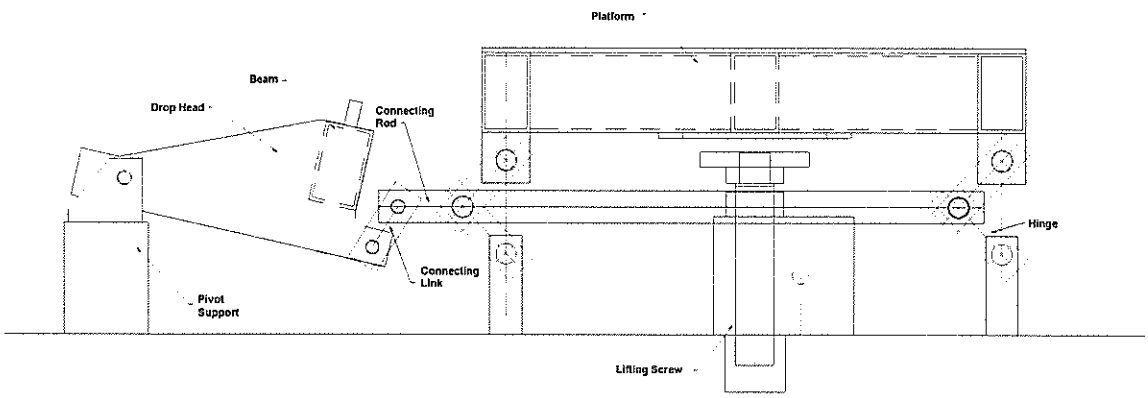

Figure 3.3 Elevation view of dropper mechanism in drive-on or lowered position.

A key feature of this design is its lifting ability. Each platform is equipped with two screw-lifting jacks. An electric motor drives a common driveline which turns a screw under each platform. The design lifting capacity is greater than 30 tonnes. Limit switches are used automatically to turn the motor off once the desired drop height of 50 mm is reached. A single screw jack is illustrated in Figure 3.4. The motor and gearboxes are not shown.

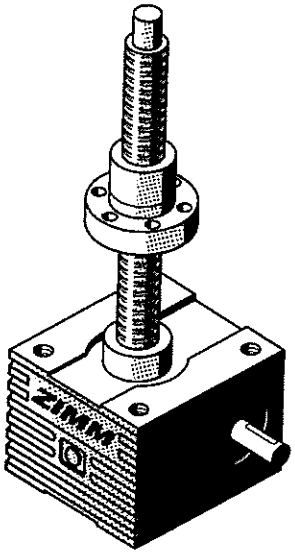

Figure 3.4 Lifting screw.

Once the vehicle is appropriately positioned, the testing technician attaches the transducers in the appropriate positions. The platform is raised 50 mm.

As the platform is being raised, the drop head will rotate (counter clockwise in Figures 3.3 and 3.5) and the beam connecting the two drop heads will rise into position for latching.

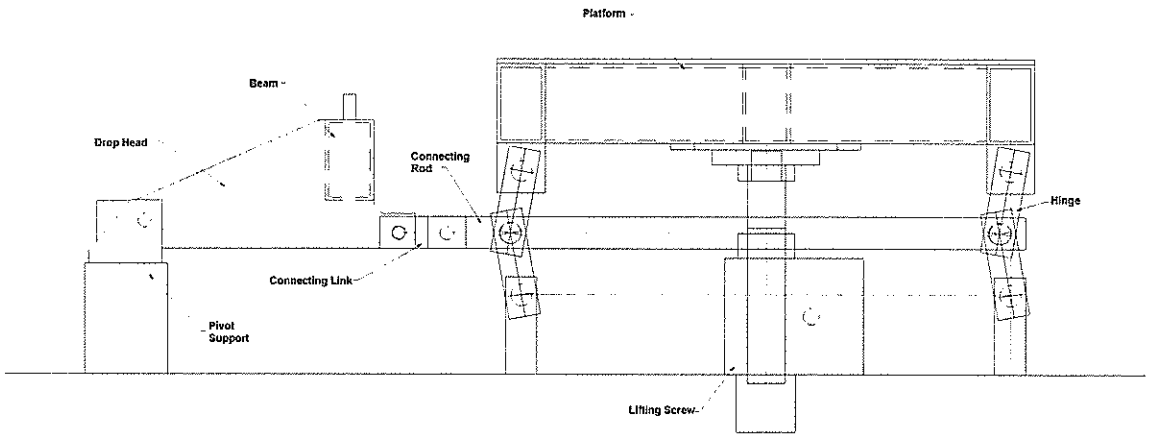

Figure 3.5 Platform in raised position.

Once the platform is lifted into position, the release mechanism is manually latched. The release mechanism is an electro-mechanical bombardier device, controlled by a foot pedal switch, a safe distance from the test pit. Two release mechanisms would be used to secure the platform (one per side). Figure 3.6 illustrates the bombardier release mechanisms set up in a test rig supporting a steel bar. The release system tower (detailed in the Appendix) consists of an adjustable rigging screw, which suspends the bombardier device, and aligning plates to locate the bombardier as the beam is raised in position for latching.

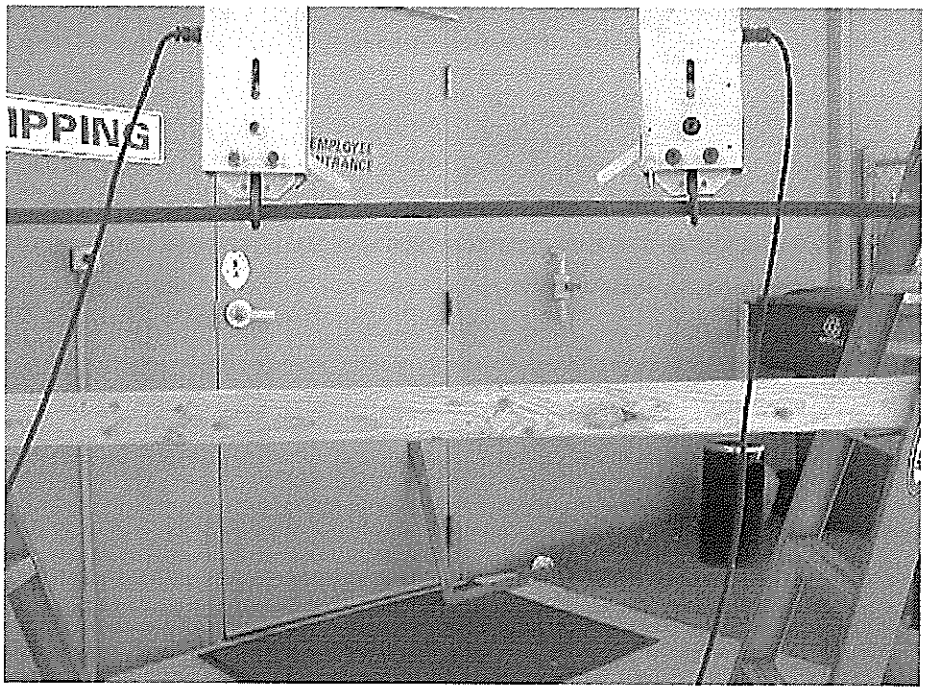

Figure 3.6 Two bombardier dropping mechanisms, synchronised.

After the release mechanism is latched, the screw jacks are lowered back into the pit, below the steel stops. The data acquisition system is started and the operator, using the foot pedal, triggers the release (both mechanisms release simultaneously).

The platform drops at an acceleration near to freefall, the transducer signals are recorded, and a report is automatically prepared from the processed signal data.

Once the report is generated, the transducers can be removed and the vehicle driven off the platform. The platform is ready for the next test.

3.2.2 Instrumentation

Three transducer options; accelerometers, string potentiometers and force transducers, were considered, along with a stand-alone data-acquisition system similar to the one used in the earlier project (Milliken et al. 2001).

While all three of the transducer options are feasible, the least expensive with the highest level of signal clarity is the string potentiometer. These were used successfully in the previous project. To comply with the EC-type test, on a quad-axle group, eight transducers are required.

The bases of the string potentiometers are mounted in a track-like strip in the ground, able to be positioned under the axle being measured. The free end of each device is to be mounted to the vehicle-chassis or axle with either a magnetic or Velcro attachment device.

A data-acquisition system capable of acquiring a minimum of 8 analogue signals is also required as part of the instrumentation system. Once acquired, the transducer signals would be processed using a desktop-type PC running the appropriate software.

3.3 Cost Estimates

Tasks 1 and 2 of Stage 2 related to the cost estimates for constructing, maintaining, and implementing the testing facility.

It is envisaged that the testing device would be integrated with an existing test facility, such as a vehicle testing station. The cost estimate reflects the modification of an existing facility to accommodate the device and the approximate cost for the increased space required for the facility, as well as the staffing and ongoing maintenance required to operate the device.

A summary of the initial outlay of costs for modifying a facility and installing the dropper mechanism is listed in Table 3.1. An itemised cost estimate is provided in the Appendix, pp. 36-37.

Table 3.1 Initial plant costs ($NZ).

Initial Investment	Cost ($NZ)
Site construction	20,000
Manufacture & installation of testing device	121,500
Commissioning	5,200
Total	**146,700**

Estimated fixed costs associated with the operation of the facility are detailed in Table 3.2. These costs are associated only with the road-friendly suspension testing device. Building rent was based on typical 2002 suburban Auckland warehouse rates and, depending upon location, this could be more or less.

Table 3.2 Fixed facility costs ($NZ per annum (p.a.)).

Fixed Costs	p.a. ($NZ)
Building Rent	3,500
Depreciation	15,000
Return on Investment (~ 10%)	15,000
Total	**33,500**

Variable costs such as labour, maintenance, and power are largely dependant on the amount of use the device receives. The variable cost estimates in Table 3.3 are based on a 40-hour week where the testing device is used about 60% of the time. This is an estimate but is a reasonably typical utilisation for this type of facility. Labour rates were based on those for semi-skilled mechanical engineering tradespeople.

Table 3.3 Estimated annual variable costs based on 1250 hours use per annum (p.a.).

Variable Costs	Rate ($/h)	Cost p.a. ($)
Labour (includes maintenance, overheads)	45	56,250
Other (includes power, consumables, etc.)	5	6,250
Total		**$62,500**

3.4 Testing Costs

Two types of test are considered in this report: type-approval testing and in-service compliance testing.

On an annual basis, the cost of operating the testing facility is estimated to be $96,000 based on 1250 hours of utilisation. This equates to $77 per hour. It is anticipated that the set-up time will be minimal since the test apparatus is a drive-on, drive-off design. This will reduce costs by reducing testing time as well as minimising the amount of down time for the vehicle.

3.4.1 Type Approval

For a type-approval test, two series of drops will be performed, one series with the shock absorbers (dampers) operational, and a second series with the shock absorbers removed or disabled. Each series should contain five drops of the vehicle to establish the level of damping and natural frequency associated with the suspension type being tested. Milliken et al. found moderately repeatable estimates of natural frequency and damping ratio (±7% and ±18% respectively) using their testing methods. The device presented here should provide tests that are at least as repeatable as theirs.

The type-approval test is expected to be considerably more expensive than the in-service test. The test is more involved, the time taken will be significantly longer and the documentation and paperwork will be more rigorous. However, it is anticipated that a type-approval test could be completed in an eight-hour day, including associated paper work.

3.4.2 In-Service Compliance

For an in-service compliance test, it is estimated that the test should take no more than 30 minutes to perform, including associated paperwork. The test would consist of a single drop; with operator discretion to perform another should the vehicle fail marginally. Note that for in-service testing, it is anticipated that a test with the dampers disabled would not be required.

4. Discussion

Milliken et al. (2001) discovered no significant difference in the estimates of natural frequency and damping ratio for test results for three drop heights ranging between 48 mm and 80 mm. Based on this finding, a drop height of 50 mm was chosen as the operational test height for this current design. It was also noted that the 112 mm drop height was very aggressive when the vehicle was dropped in close to free-fall conditions.

A significant problem experienced in the Milliken study related to the reliability of the release mechanism in terms of its timing. The new design should overcome this because a robust commercial dropping mechanism is incorporated in this design. The poor performance of the previous release mechanism was a result of the trade-offs and compromises required in making the system light enough to be portable.

While considerable effort has gone in to fully designing and specifying the product, some additional detail design and workshop consultation is expected to achieve a satisfactory device. An estimate of these costs is included in the cost analysis.

Software development costs have also been included. There will be additional expenses incorporating the algorithms used in the previous research project into a refined and user-friendly software package, suitable for use by testing personnel.

To provide for operator safety, the platform is designed so that the operator is clear of the vehicle and the device when lifting and dropping. Additional safety guard rails are included to keep spectators clear of the testing area.

5. Conclusions

Based on the results of this investigation, a road-friendly suspension testing device could be constructed and installed for approximately $146,700. This would include the testing mechanism, the transducer array, data acquisition, analysis and reporting software, installation and commissioning.

Additional running costs of the facility associated with suspension testing could be recovered with a charge of $77 per hour (annual cost divided by the estimated number of hours).

A type-approval test, estimated to take 8 hours, would result in a cost of approximately $600.

An in-service compliance test, estimated to take 30 minutes, would result in a cost of approximately $40.

Table 5.1 summarises the estimated testing cost by country. When compared to overseas estimates for similar tests, the cost of building and maintaining a testing facility in New Zealand appears to be very modest.

Table 5.1 Road-friendly suspension testing cost, by country.

Country	Estimated Cost	Estimated Test Time
New Zealand	NZD $600	8 hours
Australia	AUD $7,500	8 hours
United Kingdom	£5,500	1 – 1.5 weeks

Note that the estimates of the New Zealand testing time and costs are estimates. Also only a prototype device has been constructed for testing road-friendly suspensions in New Zealand. Conversely, the Australian and the United Kingdom prices are quotations provided by the testing agencies at the time this report was written.

Nevertheless the cost of suspension testing using the test and apparatus outlined in this report is expected to be substantially lower than the costs of road-friendliness testing facilities in Australia and the United Kingdom.

6. References

EC (Council of European Communities). 1996. Maximum authorized dimensions in national and international traffic and the maximum authorized weights in international traffic. *Council Directive 96/53/EC.*

EC (Council of European Communities). 1997. Masses and dimensions of certain categories of motor vehicles and their trailers. *Council Directive 97/27/EC,* amending Directive 70/156/EEC.

Milliken, P., de Pont, J., Mueller, T., Latto, D. 2001. Assessing road-friendly suspensions. *Transfund New Zealand Research Report No. 206.*

NRTC. 1999. Certification of road-friendly suspensions. *NRTC Vehicle Standards Bulletin 11.* National Road Transport Commission, Melbourne, Australia.

NRTC. 2000. Evaluation of in-service compliance of road-friendly suspensions - DRAFT. National Road Transport Commission, Australia.

TERNZ. 2001-2002. Assessing road-friendly suspensions: Stage 2 - Implementation feasibility study, A research proposal for Transfund New Zealand Project PR3-0607.

Appendix

A1. Design Drawings

The following design drawings were submitted to an engineering shop for a cost estimate. The quoted price, including a primer coat of paint and required guard rails was $14,000. The device is designed from standard steel sections, plate and engineering stock unless otherwise noted.

A1.1 General Arrangement

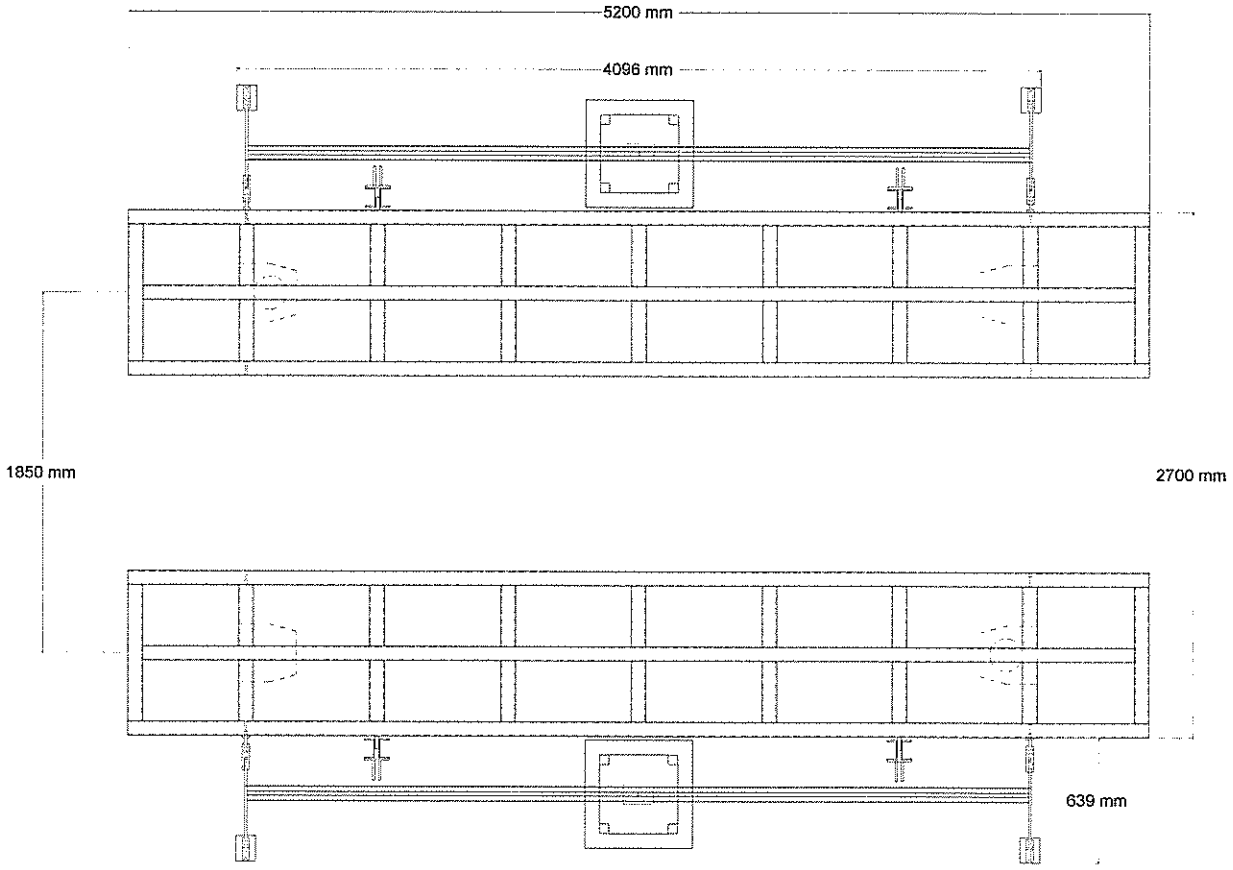

Figure A1. General arrangement: plan view of Dropper Assembly.

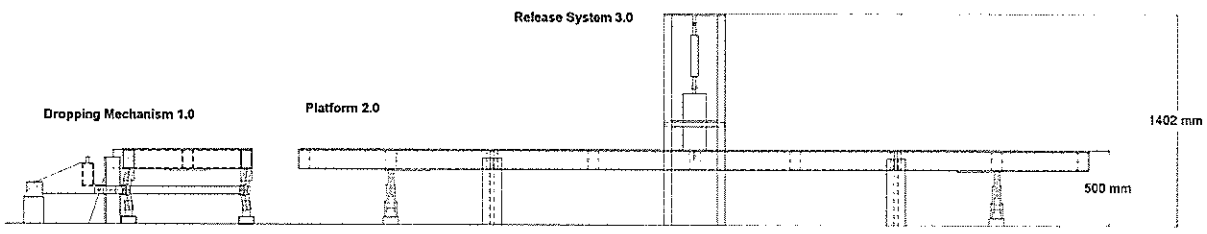

Figure A2. General arrangement: elevation view of Dropper Assembly.

A1.2 Dropping Mechanism 1.0

Figure A3 illustrates the numerical labelling system used for describing the various components. The general arrangement of the dropping mechanism is illustrated in both the raised and the dropped positions. The steel stops on which the platform rests have been omitted to avoid confusion.

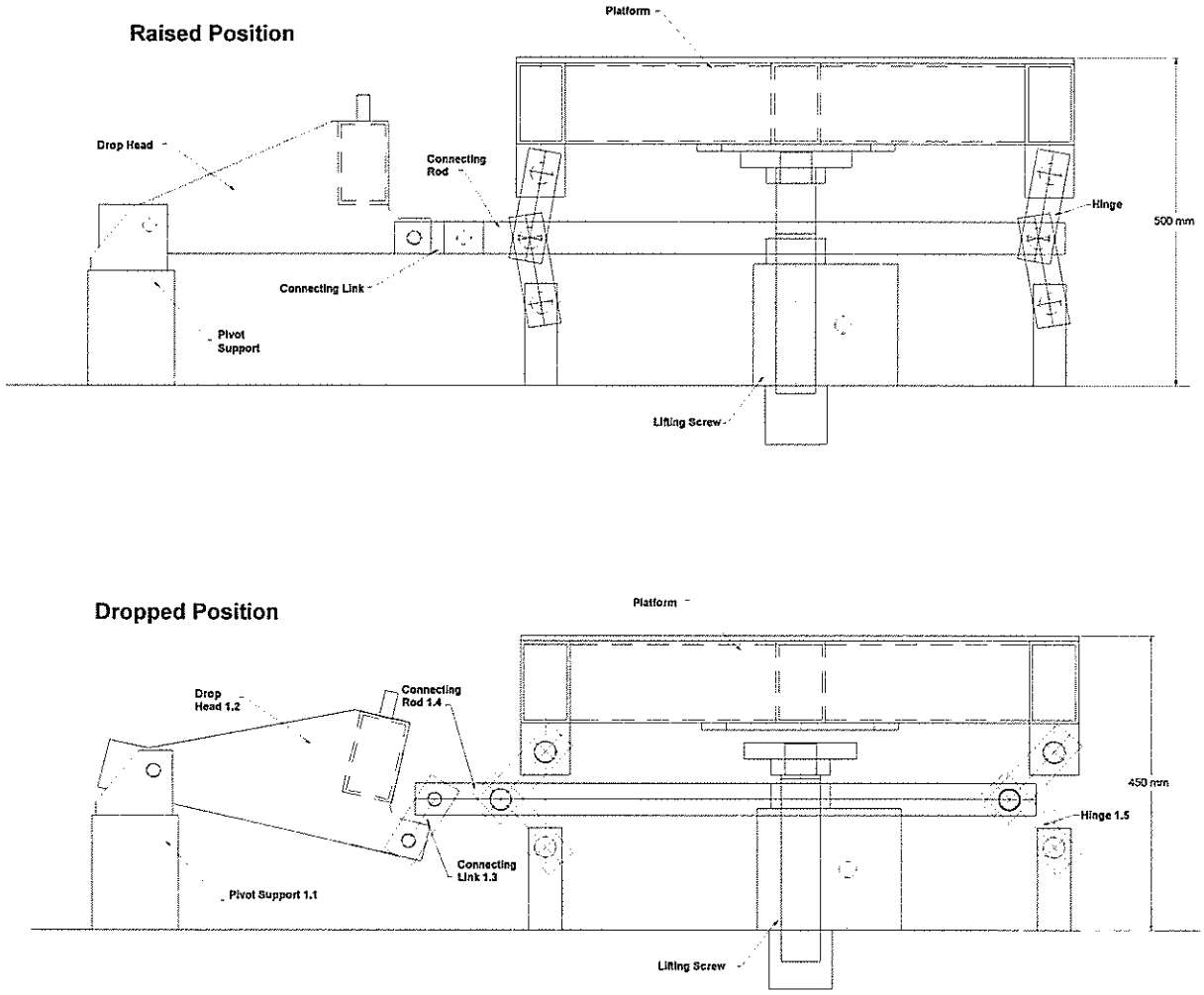

Figure A3. Elevation view of Dropping Mechanism.

A1.3 Pivot Support 1.1

Pivot Support 1.1 holds Drop Head 1.2 and allows it to rotate about the pivot point, which is a 20 mm-diameter HT Bolt.

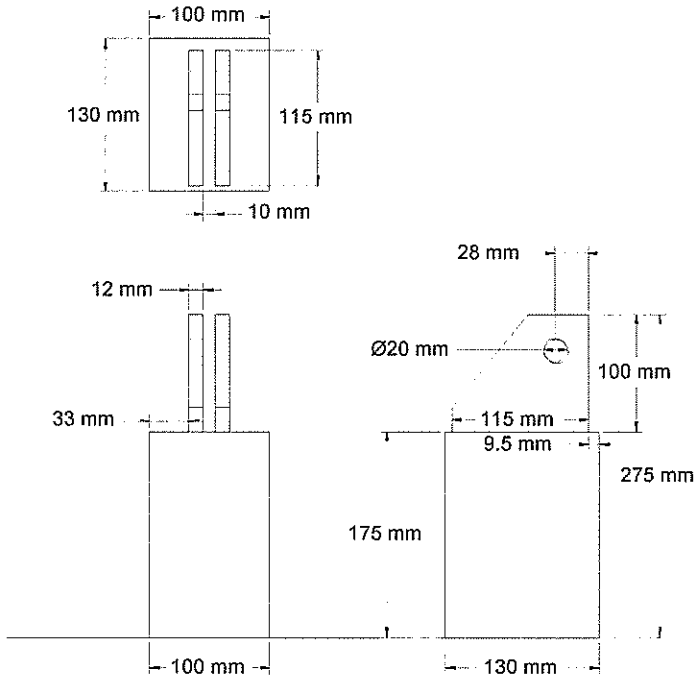

Figure A4. Pivot Support 1.1 detail.

A1.4 Drop Head 1.2

The drop shown below in Figure A5 is in the pre-release or raised setting. It has three points of connection, the pivot point, the connecting link, and a beam which extends parallel to the platform to the other drop head (two drop heads per platform are required, forming a single rigid body). In the centre of the beam is a connection point for the release mechanism to engage.

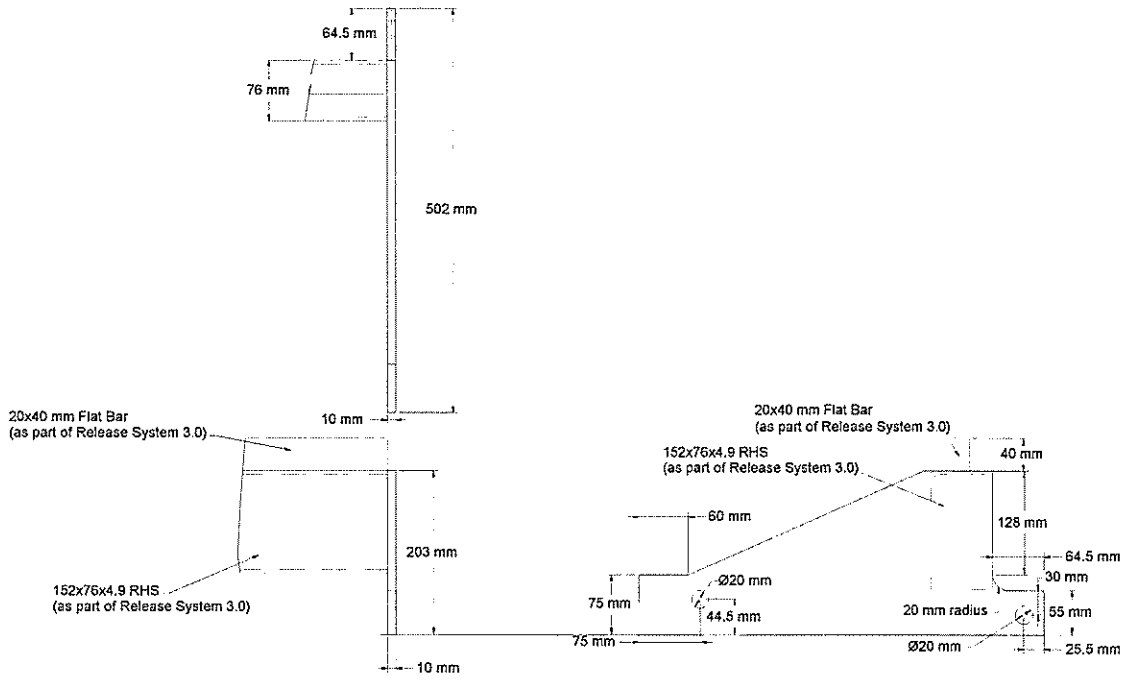

Figure A5. Drop Head 1.2 detail.

A1.5 Connecting Link 1.3

The connecting link (Figure A6) connects the connecting rod to the drop head.

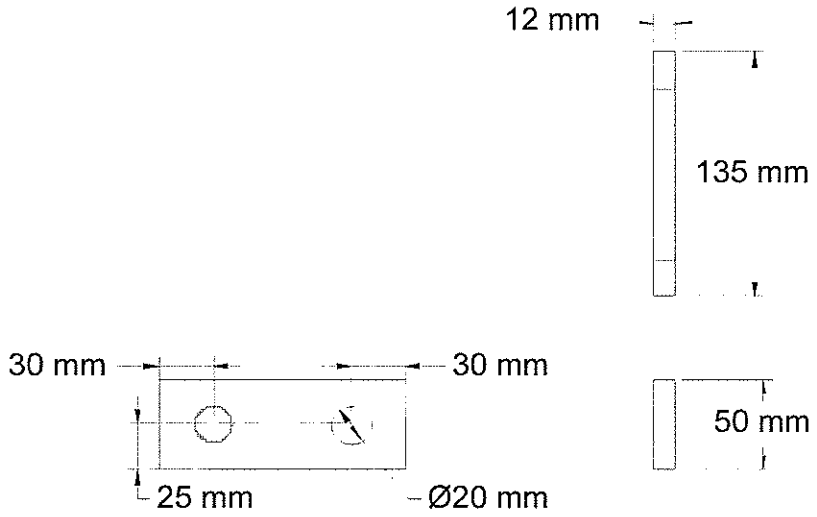

Figure A6. Connecting Link 1.3 detail.

A1.6 Connecting Rod 1.4

The connecting rod runs perpendicular and beneath the platform (Figure A7). It connects the hinge elements to the connecting link.

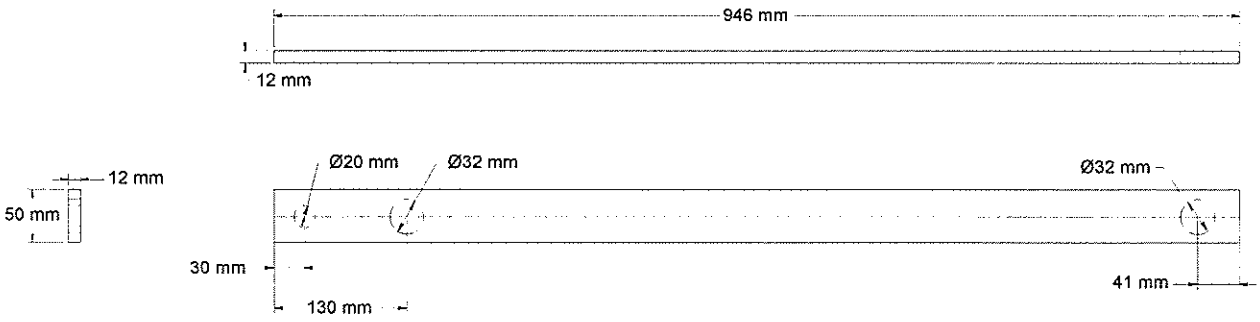

Figure A7. Connecting Rod 1.4 detail.

A1.7 Hinge 1.5

The hinge (Figure A8) is essentially a 4-bar link system. It connects to the base of the platform and is attached at the ground with a base plate. When the release mechanism is connected and the screw jacks lowered, the hinge system provides the vertical support for the platform.

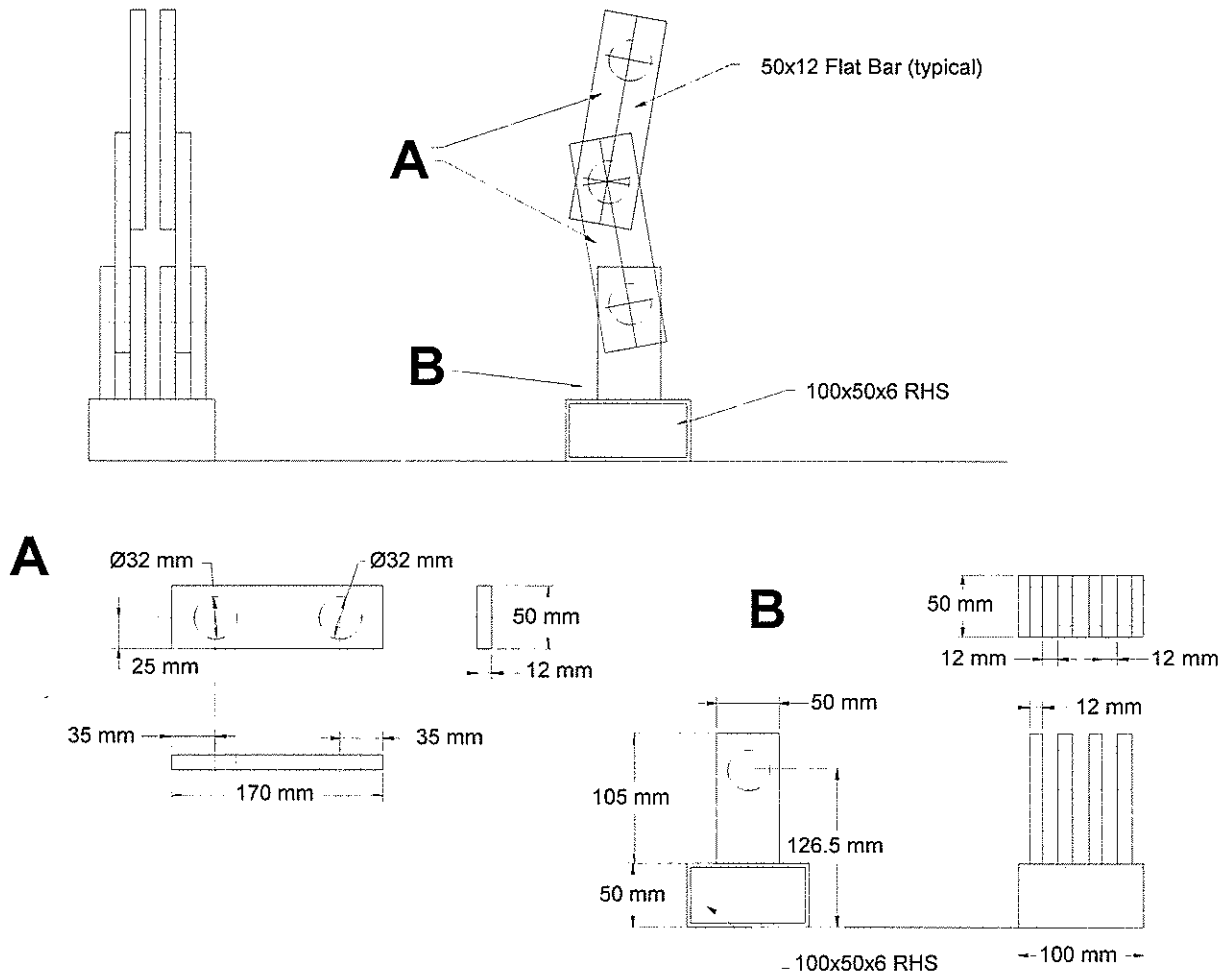

Figure A8. Hinge 1.5 detail.

A1.8 Platform 2.0

The platform is made almost entirely from structural steel rectangular hollow sections. All connections are welded so there are no bolted connections. A covering of 6 mm chequer plate is welded to the top of the framework. This constitutes the deck of the platform, where vehicles will drive. The platform general arrangement drawing is illustrated in Figure A9.

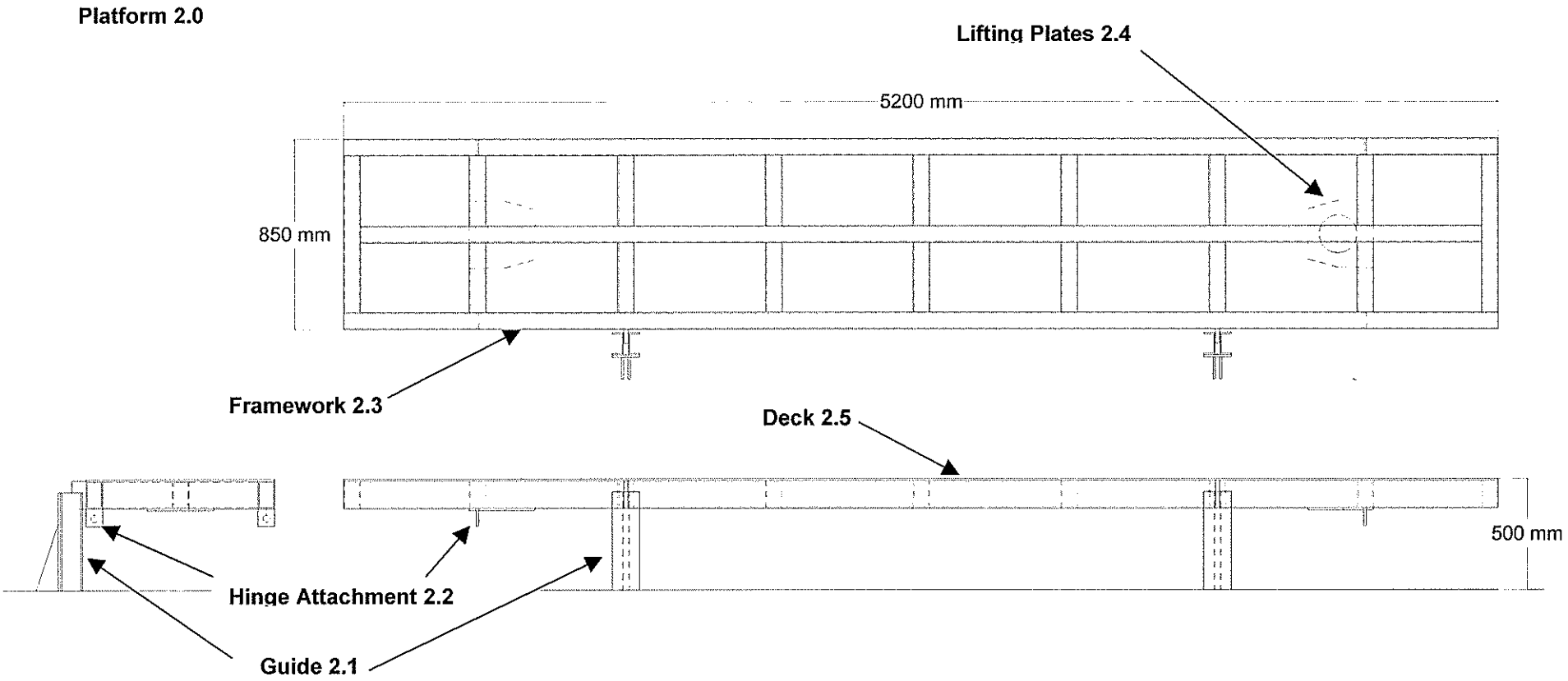

Figure A9. Platform 2.0, general arrangement, plan and elevation view (one platform only).

A1.9 Guides 2.1 and Hinge Attachments 2.2

Two vertical guides (Figure A10) positioned between the dropping mechanisms on each platform locate the platform and constrain the movement of the platform such that it can only move vertically.

The hinge attachments provide the connection point on the platform for the hinge.

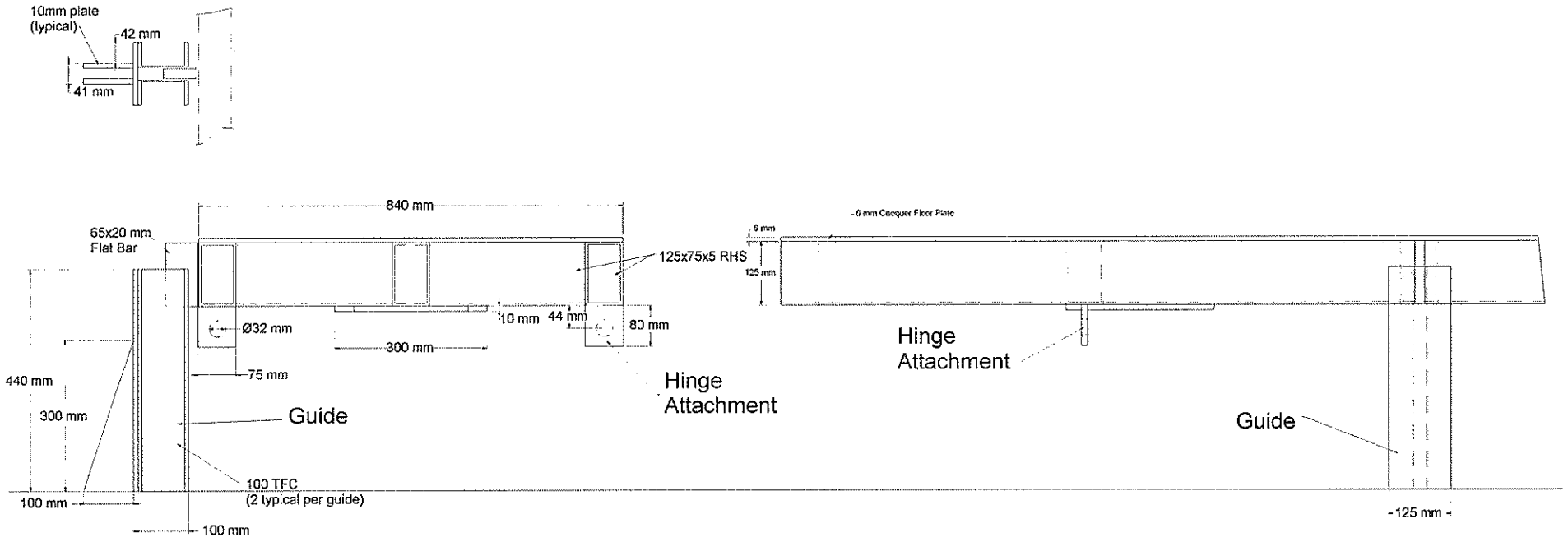

Figure A10. Guides 2.1 and Hinge Attachments 2.2 detail.

A1.10 Framework 2.3

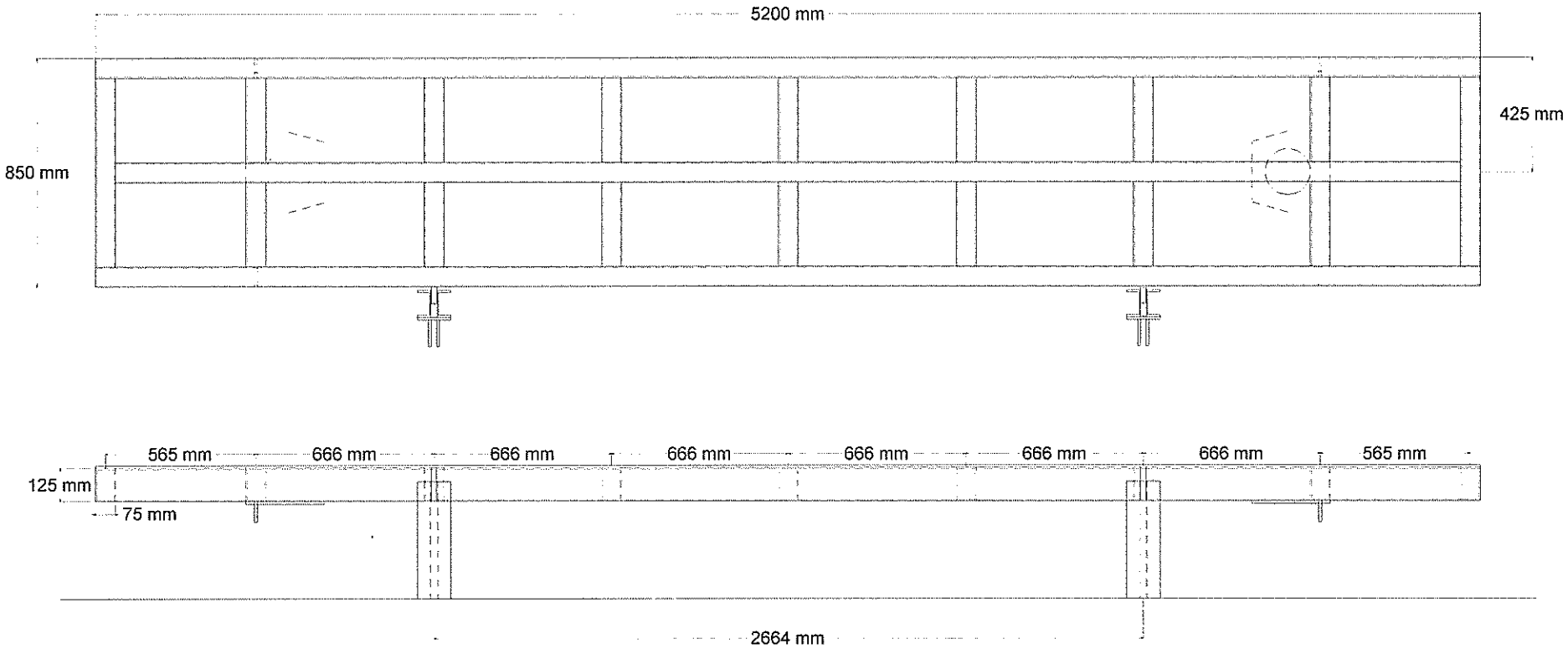

Figure A11. Framework 2.3 detail.

A1.11 Release System 3.0

Figure A12 illustrates the general arrangement for the release system. Essentially a "tower" is constructed from square tubing to support a rigging screw. The rigging screw supports the bombardier device. The rigging screw is used to adjust the height of the bombardier relative to the beam.

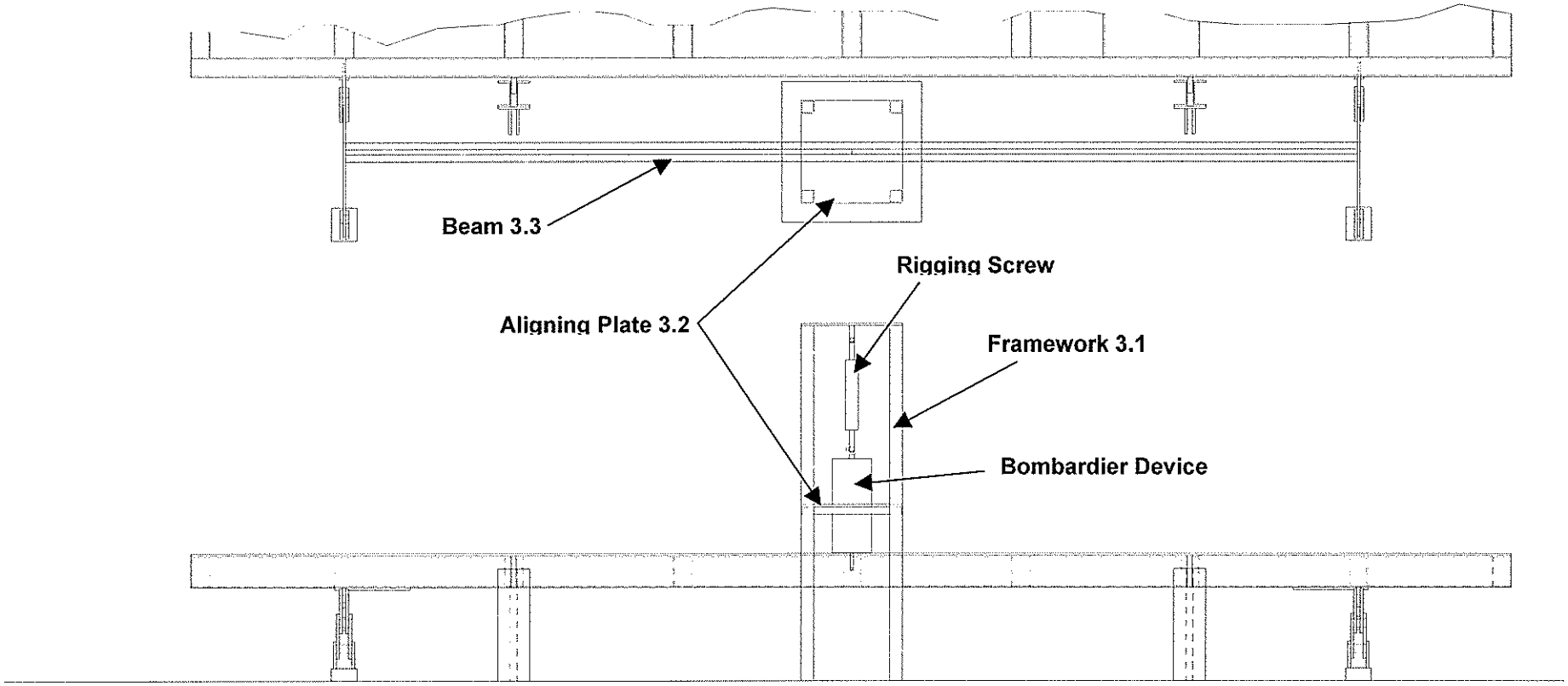

Figure A12. Release System 3.0, general arrangement plan and elevation view.

A1.12 Framework 3.1 and Aligning Plate 3.2

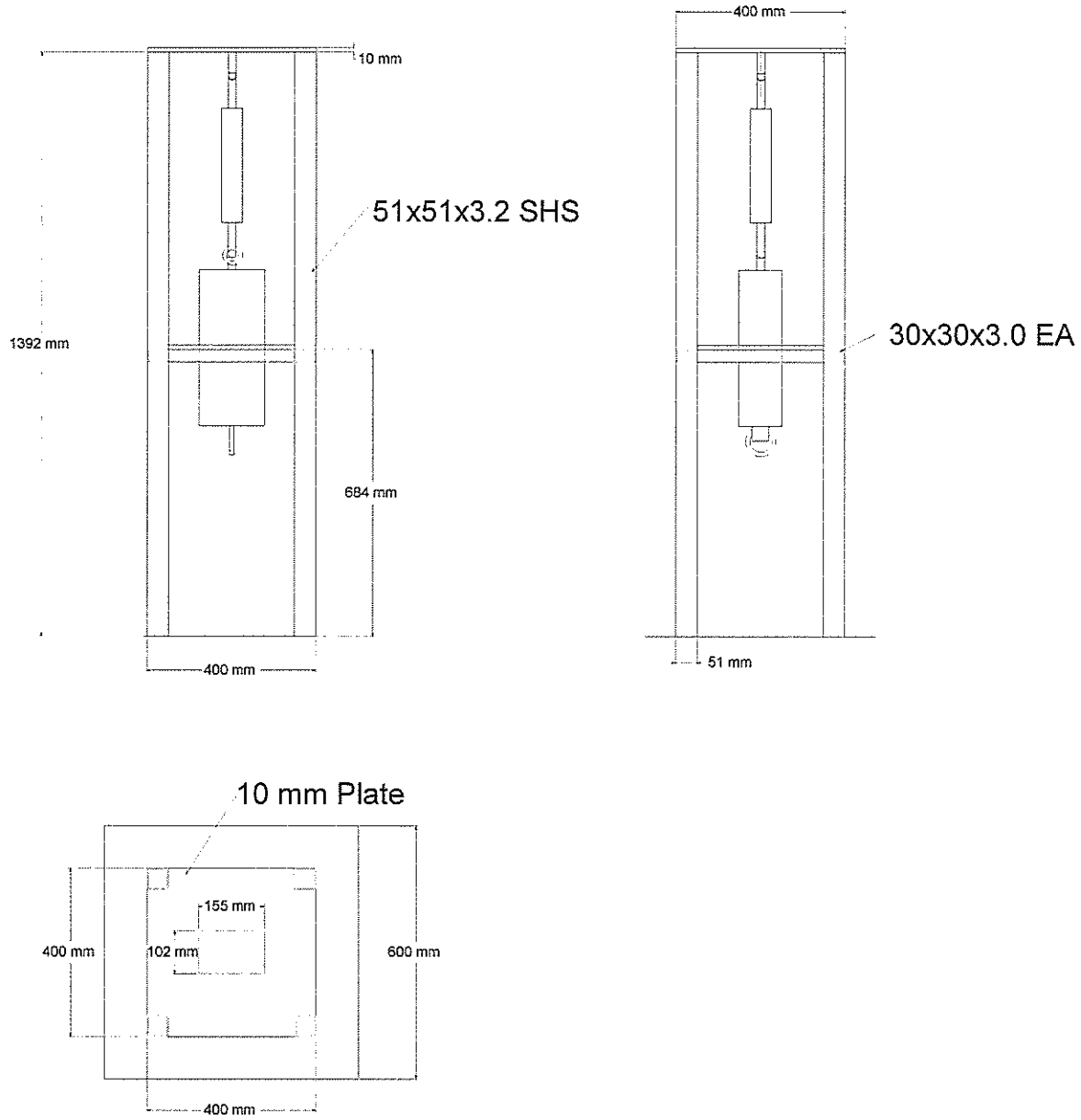

Figure A13. Framework 3.1 and Aligning Plate 3.2 detail.

A1.13 Beam 3.3

The jaws of the bombardier device latch through a hole (not shown in Figure A14) in the flat bar welded to the beam. The beam ensures that movement of the two hinge mechanisms remains synchronised.

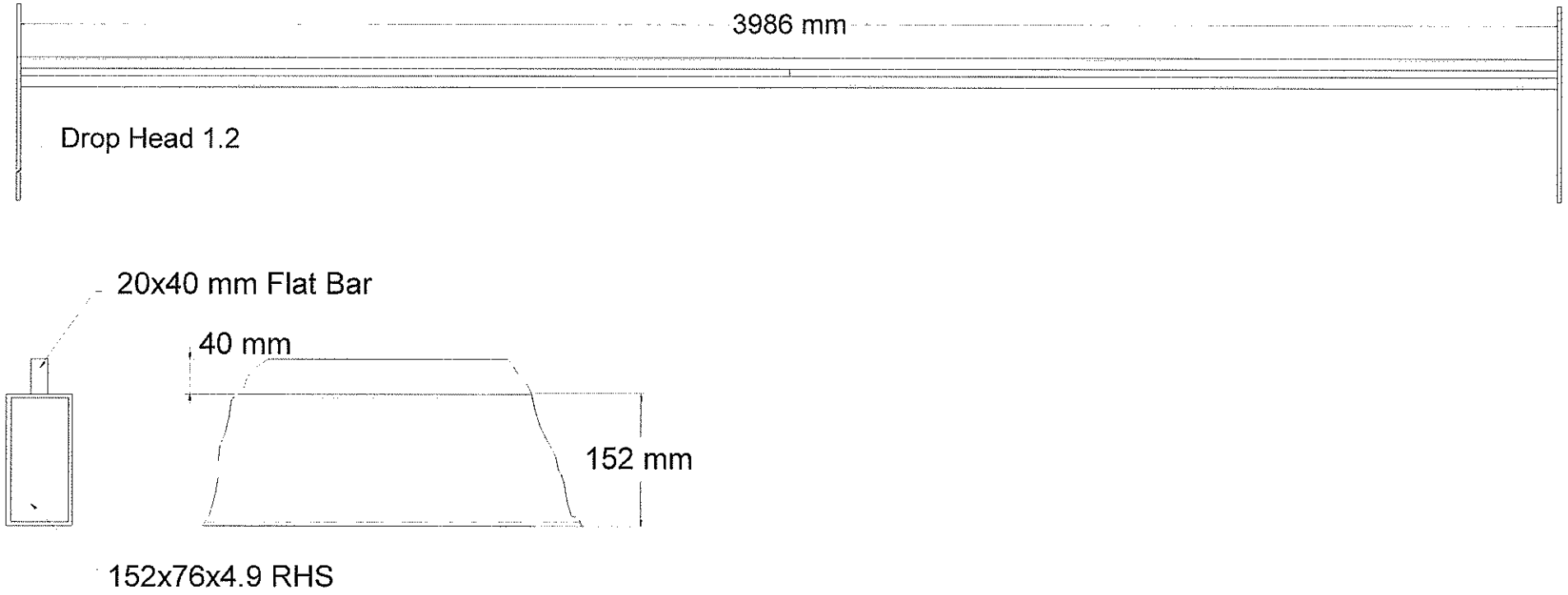

Figure A14. Beam 3.3 detail.

A2. Test Facility Cost Estimates

All cost estimates are in New Zealand dollars and exclude GST. Quoted prices were valid as at November 2001.

The construction cost of the truck dropper device, data acquisition system and minor modifications to an existing testing facility is estimated to be **NZ$146,700.00 plus GST.**

A2.1 Site Construction

Table A2. Facility modification cost estimate.

Task	~ Labour (based on 2 men)	Materials	~ Cost ($)
Saw Cutting	1 day	Diamond saw blade	1,500
Excavation • Removal	2 days	Digger & truck tip fees	2,000
Extras • Footings • Underpin • Compaction	2 days 3 days	Boxing Basecourse	6,000
Prep for footings	1 day	Boxing	1,000
Steel tie	2 days	Re-bar	3,000
Pour footings	½ day	Concrete	500
Block or boxing	2 days	Block, mortar, concrete	2,500
Pour Slab	1 day	Concrete	2,000
Total			**$ 18,500**

A2.2 Electrical Installations

It is assumed that an existing facility will be modified to accommodate the testing device. This may be a facility such as a vehicle testing station, where a power source is available and an additional circuit may be installed.

Table A3. Electrical cost estimate.

Task	~ Labour	Materials	~ Cost ($)
Run Conduits • Circuit breaker • Pull wire • Hook-up motor • Power for drop release • Control panel	2½ days	Conduit, wire, circuit breakers	1,500
Total			**$ 1,500**

A2.3 Screw Jack Installation

Table A3. Screw jack installation cost estimate.

Task	~ Labour (based on 2 men)	Materials	~ Cost ($)
Layout	1 day		1,600
Assemble • Screw jacks as per quote	1 day	Screw jack, drive lines, transmissions, motor	1,600 20,000
Mount • Equipment hire (rotor-hammer, jacks, etc.)	1 day	Anchors, drills, etc.	2,000
Total			**$25,200**

A2.4 Dropper Installation

Table A4. Dropper construction and installation cost estimate.

Task	~ Labour (based on 2 men)	Materials	~ Cost ($)
Layout	1 day		1,600
Detail Design & Workshop consultation			20,000
Construct & Assemble • Platform & guard rails • Release mechanism • Release supports • DAQ system	2 days	 Assembly as per quote Assembly as per quote (control panel) 2 x rigging screws Software development, PC, A/D, 8x transducers	3,200 14,000 15,200 700 40,000
Mount • Equipment hire (rotor-hammer, jacks, fork hoist, etc.)	2 days		1,600
Total			**$96,300**

A2.5 Commissioning

Table A5. Expected commissioning costs.

Task	~ Labour (based on 2 men)	Materials	~ Cost ($)
Test • dry run • empty semi • loaded semi	1 day	Truck, driver and load hire	2,000
Modifications	1 day		1,600
Re-test	1 day		1,600
Total			**$5,200**